UNIDRILL

DESANDER
UDF200/UDF250

User's Manual

Welcome to use this product.

- *Before using the product for the first time, please read carefully all the documents delivered to help you better use the product. If you fail to operate the product according to the instructions and requirements of the manual, or misuse the product due to misunderstanding, etc., the company will not be responsible for any losses arising therefrom.*
- *This instruction is subject to change with the development of technology without prior notice.*

Contents

1.Overview

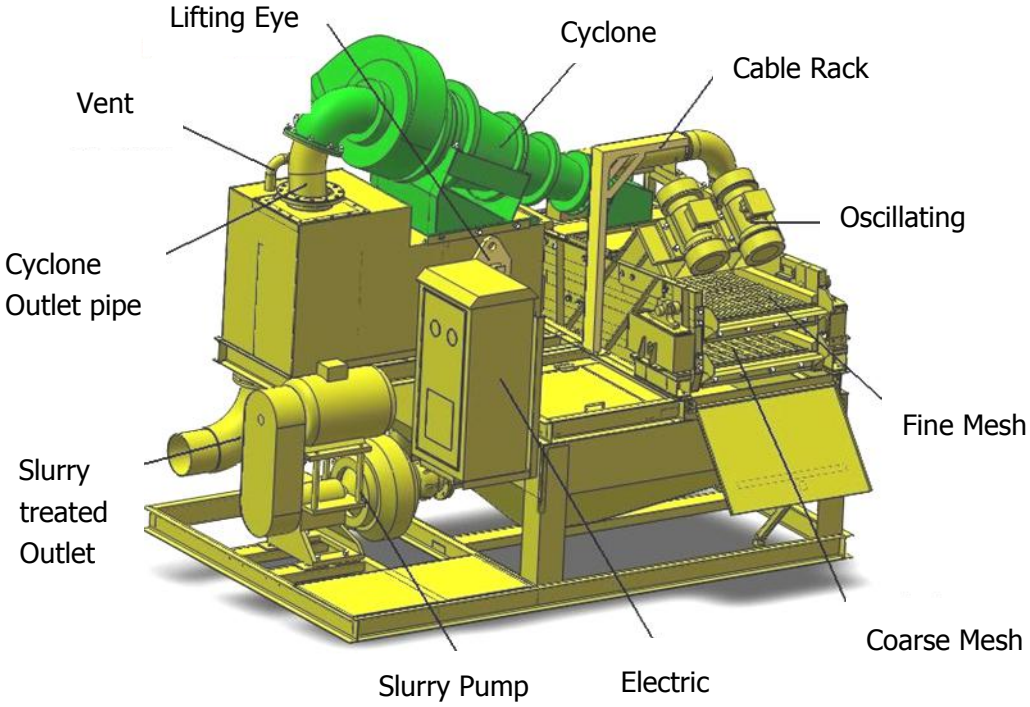

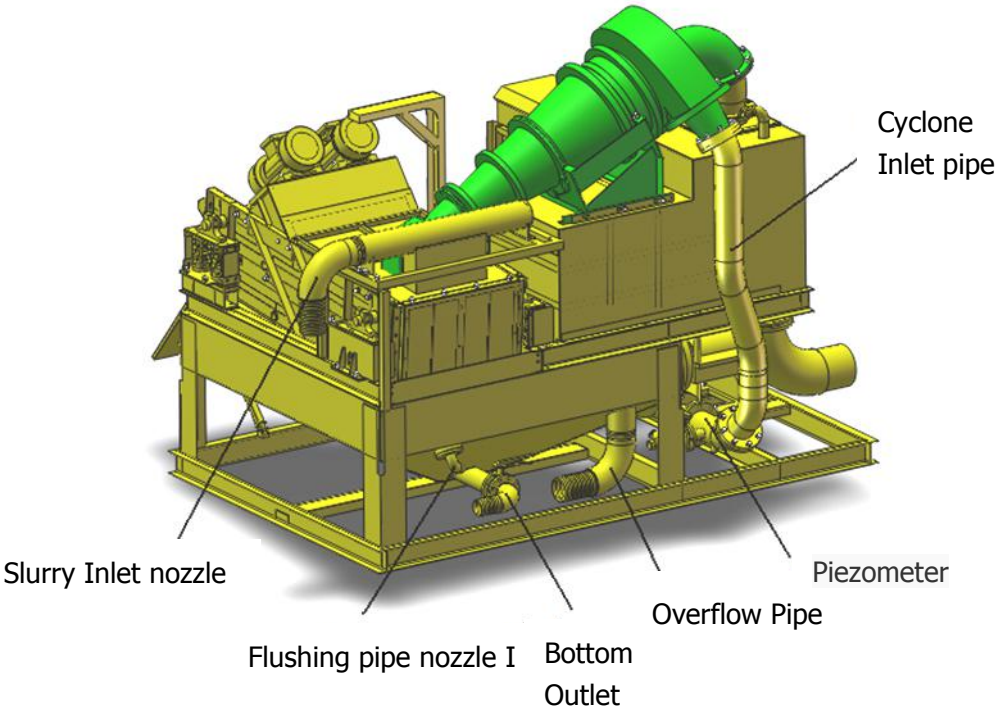

Dimensions: 3.5x2.25x2.85m

Weight：5.2t

1.1 Slurry Inlet & Outlet

Nozzle Diameter of Inlet pipe: 6 inches

Nozzle Diameter of Outlet pipe: 10 inches. Hard horse is preferred, as the soft rubber horse may cause overflow at the cyclone outlet, which will contaminate the ground.

1.2 Oscillating Motors

Brand: Wolong, Made in China.

Model：MVE2400/15

Bolts：M16x120- 12.9

Lock nut with washer

1.3 Mesh

Coarse mesh：800x650x45-3mm

Quantity：3

Fine mesh：800x575x45-0.4mm

Quantity：3

Material：Polyurethane

Tensioning device for the meshes

Plate：965mm * 4 units

Block I：965mm * 4 units

Block II：855mm * 4units

Material：Polyurethane

Ball stud: M16x90 M16x45

1.4 Overflow port

Overflow port size, 6 inches, set as an emergency outlet, worked when the inlet slurry is more than what the product can treat.

1.5 Slurry Pump

Packing specification: 12x12mm

Requirements for the packing: Oil resistance, anti-wear, thermo-stability

Attention: Before started, please be sure that there is no particulate bigger than 5mm to avoid the blocking of cyclone

1.6 Piezometer

To easily check the pressure in cyclone, 0.24-0.3Mpa is the proper pressure. And if the pressure is lower than 0.24Mpa, it may cause the slurry to come out of the product at the mesh. The reasons of low pressure are as follows:

- the impeller of the pump is worn out
- the packing is worn out

Check and replace the worn-out parts. For more details, please read the Trouble shooting

1.7 Electric cabinet

The electric cabinet uses the waterproof design. To ensure your safety, please connect the earth wire in time.

The total power of the product is 32kw, and it's recommended to use the cable of 58kw. And when used in plateau area, the cable should be 91kw.

1.8 hoisting

Sling: 5t*4units

Please pay attention to your safety during the hoisting.

2.Transport and Installation

2.1 Transport

The dimension of UDF-200(250) desander is 3.5m×2.25m×2.85m and its weight is 5200 kg. Its horizontal outline is rectangular. The system can be loaded on a 5t truck and transported to the construction site and assembled in one parts respectively.

Attention: Lock the 4 **M12×37 bolts** to connect the Cable Rack and Electric cabinet, otherwise, the electric cabinet may get overturned.

2.2 Installation

When the system is installed on the ground, a flat and solid foundation (3×4m) should be remained. If the site foundation is soft, the ties should be laid there on. The system maintenance, slurry drainage, slag drainage and its transport should fully be considered in site arrangement of the system.

The qualified standard of the system erection is as follows: the inclination of the pedestal in the horizontal direction should not exceed 1%. Sometimes the system can be arranged on the container-type slurry basin in order to spare the occupied space and to concentrate the preparing purification technology in relation to slurry, but the system must be firmly supported and the reliable and protection facility must be provided for the operators.

3.Safety

Before the operation of the system, working personnel must be strictly trained at first and should grasp the necessary theoretical knowledge and master the operation method. They should be able to find and eliminate potential danger and ensure that the system can run in a safe state.

The following requirements must be strictly obeyed:

- A specially assigned person is needed to adjust the triangular belts of the motor.
- Before the operation of the system, a well-experienced electrician or technician should check all electric components and circuits in electric console, because some electric components and wiring terminals may be loose after transportation or long operation. The whole electric control part shall be checked before the equipment starts to work or after it has been operated for a long time. The loosened part should be tightened as well.

Attention: When the equipment starts to work, the electric control part should be started without load, check each electric relay to see whether they are normal. Test running with load should be done after it operates without loads normally. The equipment should be operated when data in the volt gauge and electric current meter shows normal.

- The pump electric machine D1 adopts Y-△ reduction voltage starting way. Y-△ changeover is controlled by the time relay, it takes about 7-8 seconds. QA1 is the start button and TA1 is the stop button.
- The oscillating electric machines D2 and D3 adopt the direct starting way. Two electric machines rotate in the opposite direction and stop in the way of energy consumption brake. QA2 is the start button and TA2 is the stop button. Note that when the stop button TA2is operated, it must be pressed down totally, and then the energy consumption brake works.
- Power supply: 380V/50 Hz when it is necessary to connect the supply cable, the slurry pump should be point-moved. It is ensured that the impeller runs in normal direction according to the requirements.

Attention: To guarantee the impeller of slurry pump turning according to the requirements, a protector for phase order and phase break has been installed in the electric cabinet when manufactured. If the indicating light is red, it shows that input wiring order is wrong. In this case, it should be changed. The indicating light should be green when it is normal. When the oscillating motor or slurry pump needs to be maintained, the dismounted wire should be marked so that it is connected according to the original phase order after maintenance.

When the failure in the circuit has arisen, non-working personnel should not open and check the electric console.

- All electric components in the console should not violently shake in the process of operation. Otherwise it should be checked whether the connecting parts are fastened, erection foundation of the system is flat and solid and the oscillating screen and pumps are in the normal condition.
- In case of slurry spraying or in rainy and snowy days it should be ensured that the console and motors should be waterproof.
- The slurry in the pump should be drained out totally after stopping pumping .
- It is necessary to check the slurry reservoir and allow no foreign substance(≥5 mm)to be in the slurry reservoir in order to avoid blocking the cyclone.
- When the oscillating screen is started, the working noise should not exceed 80 db.
- The initial running period of the oscillating motor is 100 hours in total. In this period, the fastening state of ground bolts should be checked once a shift.
- In the operation of the system, Getting too close to V-belts, oscillating motors and springs may result in injury.
- Because the pumping fluid can play a cooling action, the slurry pump may not run free, otherwise the packing may be burnt out. When the fluid level of the slurry reservoir is lower than suction pipe orifice, the pump should be stopped at once.

4. Operation Procedure

4.1 Starting:

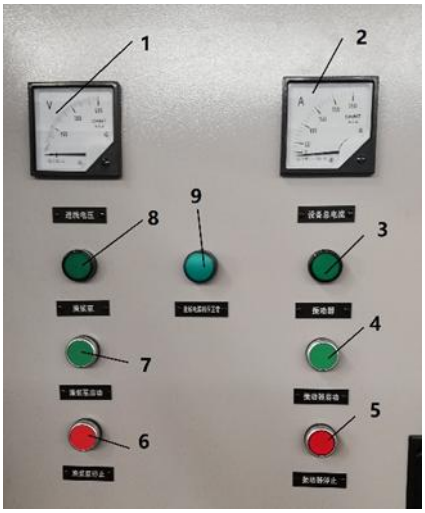

1. Voltmeter
2. Ammeter
3. Screen indicator
4. Screen start button
5. Screen stop button
6. Slurry pump stop button
7. Slurry pump start button
8. Slurry pump indicator
9. Incoming cable phase order indicator

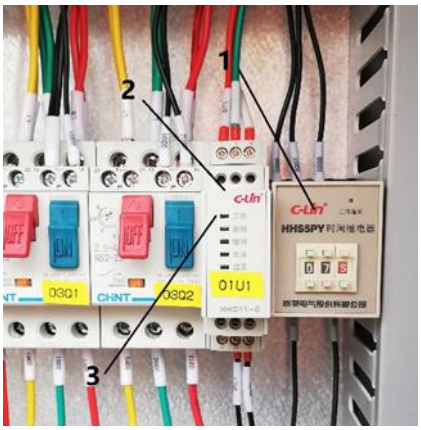

1. Time relay
2. Phase sequence protector
3. Indicators

If Indicators turn green, it means the cables are correctly connected; and please turn off the power and re-connect the incoming cables when they are red.

Re-connect the incoming cables here to ensure the indicators are green.

4.1.1 To close the air switch and connect main power supply

4.1.2 To press —screen start button start the oscillating screen

4.1.3 When the slurry level height in the slurry reservoir has exceeded the pump top,—pump start button should be pressed and the slurry pump should be

started, gradually the outlet valve of the slurry pump should be opened and simultaneously the pressure of the pressure gauge should be observed whether it reaches to the prescribed value 2.0-2.5 kg/cm2. If the pressure of the pressure gauge is lower than the prescribed value after the starting of the pump, the pump should be stopped and checked.

4.1.4 When the driller makes drilling in the overburden, the recoil valve should be kept opening in order to prevent the slurry reservoir from silting and flooding.

4.2 Stopping:

4.2.1 To stop providing the slurry of the reverse cyclic and pump.

4.2.2 To let the slag mortar pump (slurry pump) run a moment in order to handle the residual slurry in the slurry reservoir.

4.2.3 To press —pump stop button and stop the oscillating screen from running.

4.2.4 To let the dewatering screen run a moment until there is no load in the cyclone.

4.2.5 To press —screen stop button and stop the oscillating screen from running.

4.2.6 If the system has not come into the operation in linger time, water should be filled into the system and run 10 minutes and the screen mesh should be cleaned with wire brush.

4.2.7 To open the slurry drainage valve of the slurry reservoir and to clean the residual slurry.

5. Trouble shooting

No	Failure	Cause	Remedy
1	Press start button of the screen, the oscillating screen does not oscillate.	Fuse is burnt out;	Replace fuse
		Power supply is open or loss of phase.	Check the circuit or wiring
2	After starting the oscillating screen, the amplitude is small and the lateral swing is large.	One of two oscillating motors does not work or work unidirectionally.	Check the motor which does not work, solve the problem about loss of phase
		Unidirectional rotation	Change two phases power supply of the oscillating motor
3	The rise of temperature of the oscillating motor is high.	Bearing overheating	Repair or replace bearing
		Unidirectional rotation	Handle loss of the phase
		Rotor contacts internal wall	Repair the rotor
		Short circuit between turns	Repair the stator
		overload	Reduce load
4	One end of the oscillating motor has overheated.	Lubricating oil is dry	Fill oil
		Bearing is worn out	Replace the bearing
5	The current of the oscillating motor is too large.	Only one motor works	Overhaul the oscillating motor which doesn't work
		overloading	Reduce the feeding amount
		bearing seizure or lack of oil	Replace the stator
		Unidirectional rotation or short circuit between turns	Adjust the eccentric block
6	Torsion of the oscillating screen	The eccentric blocks of two motors are not identical	Adjust the eccentric blocks
		Two sets of springs at inlet or outlet are not matched	Use the identical springs
7	Oscillating screen	The time of braking relay is not right	Adjust the time of braking relay again
		Failure in the circuit	Overhaul the circuit
8	Noise of the oscillating screen exceeds 80 db	The ground bolts loose	Tighten or replace the bolts
		The screen mesh loose	Fix the mesh
		The screen mesh is damaged	Weld or replace the mesh
		Worn-out bearing or loose internal parts	Replace the worn bearing or overhaul the internal parts

No	Failure	Cause	Remedy
		Worn-out isolation springs	Replace the springs
		Local breakage of body	Weld or replace the body
9	Oscillating force of the screen changes.	Failure in the circuit	Overhaul the circuit
		The frequency and voltage of the power supply has not conformed with the requirement	Replace the power supply
		loose eccentric blocks	Fix the eccentric blocks
10	The slurry pump does not suck.	Leakage in the suction pipe or in the packing	Block the leaking part
		The steering is not right or the impeller is worn	Check the steering or replace the impeller
		The suction pipe is blocked	Eliminate the stopping
11	The bearing of the slurry pump is overheated	Too much or too less grease	Fill appropriate amount of oil
		The grease has foreign substance	Replace new grease
		The bearing is worn	Replace the bearing
12	excessive shaft power	The packing gland is too tight, the packing is heated	Loose the packing gland bolt
		There is friction in the pump	Eliminate the friction
		The bearing is worn	Replace the bearing
		The belt of driving is too tight	Adjust the belt
		Usual flow of the pump	Adjust the working state of the pump
		The speed of rotating is too high, high density	Adjust the speed of rotating
		The motor shaft does not conform to the pump shaft	Adjust the shafts of motor and pump
13	The life of the bearing in the pump is too short.	The shaft of the rotor is not parallel to the shaft of pump	Adjust the shafts of motor and pump
		The shaft is bent	Replace the shaft
		There is friction in the pump or the impeller is not kept in a state of balance	Eliminate air in the inlet or the stoppage
		There is foreign matter in the bearing or the grease is not suitable	Wash the bearing or handle the grease of the bearing

No	Failure	Cause	Remedy
		The bearing is assembled unreasonably	Replace the bearing or assemble again
14	The packing of the slurry pump is leakage.	The packing is worn	Replace the packing
		The sleeve is worn	Replace the sleeve
15	The Vibration noise of the pump is high.	The bearing is worn	Replace the bearing
		The impeller is not kept in a state of balance	Replace the impeller
		There is air in the inlet pipe or the inlet pipe is stopped	Eliminate air in the inlet or the stoppage
16	Sand is not silted from the cyclone; sand content of the purified slurry hasn't significantly changed.	The sand silting orifice in the cyclone is stopped	Clean sand silting orifice and intermediate storage tank
		The feeding pressure of the cyclone is too small or not stable	Improve feeding the state of the cyclone
17	Water content of slay in oscillating screen is too much	Sand silting orifice of cyclone is blocked	Clean sand silting orifice and intermediate storage tank
		Screen mesh blocked	Clean screen mesh and repair welded parts or replaced
		Locating wedge loose	Fix wood wedge again
		Oscillating force of motor is not suitable	Adjust oscillating force of motor
		Inclination angle of screen is not correct	Adjust inclination angle of oscillating screen
18	Flooding of slurry reservoir.	Control buoy does not float	Replace buoy
		Slurry pump not sucked	Overhaul slurry pump according to No.10
		Rotating speed of pump in too low	Check circuit
		The amount of slurry is fed by reverse sand pump is too much	Properly reduce slurry feeding amount
		Outlet pipe blocked	Clean outlet pipe

6.Routine Maintenance

The correct and regular maintenance of the system is a key link for the full development of the system efficiency and for the extension of service life. Maintenance procedure of the system:

- Shift maintenance: after 8hrs.
- Weekly maintenance: after 120hrs. (3 shifts/day, 5days/week)
- Monthly maintenance: after 480hrs.

6.1 Shift maintenance

Project classification	Specific Content	Remarks
Oscillating screen	Check the ground bolts of vibration motor to see if they are tightened. Check the screen mesh to see if it is fixed. Clean the coarse and fine screen meshes. Check springs.	Within turning round for 100 hours on initial stage
Slurry pump	Check the sealed positions. At the root of sealed plate, add calcium base grease. Check the electric motor and the temperature rising of bearing	
Slurry reservoir	Inspect the state of silting up and the liquid level control buoy. Check if there is any bigger foreign matter. Clean it if necessary.	

6.2 Weekly maintenance

Project classification	Specific Content	Remarks
Oscillating screen	*Check the coarse and fine screen mesh to see if they are broken or damaged*	Mend and weld if necessary
Slurry pump	*Check v-belts*	
Valve	Check the valve to see if they are broken or damaged.	Clean or replace if necessary

6.3 Monthly maintenance

Project classification	Specific Content	Remarks
Oscillating motor	Add or replace grease once	Add moly disulfide grease
Slurry pump	Inspect interval between impeller and front guard board	Control it between 0.5~1mm

Appendix A: BZ series slurry pump

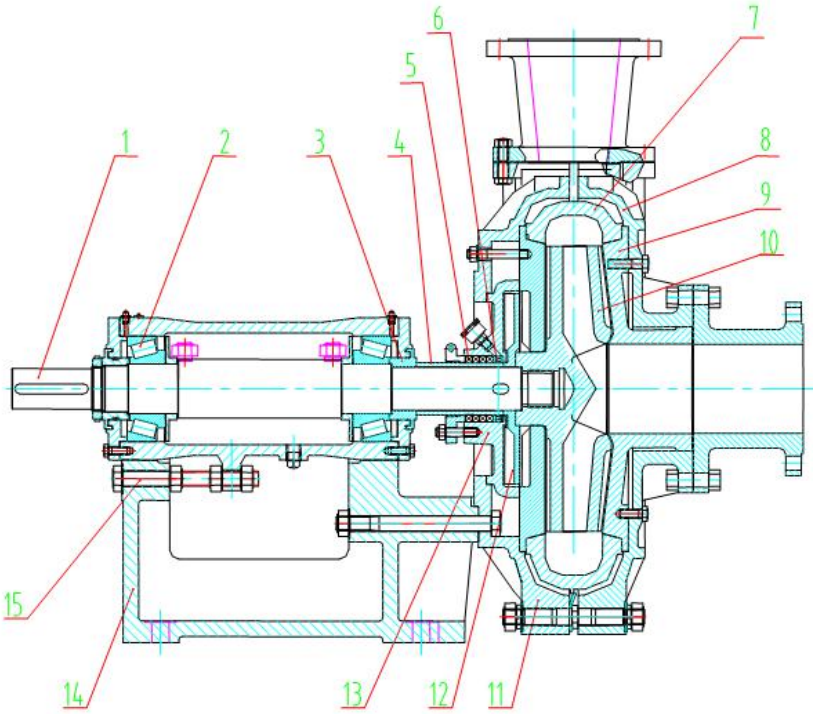

Fig 1；Structural Drawing

(1).shaft ⑵.bearing ⑶.O ring ⑷.sleeve ⑸. Seal cage ⑹O ring
⑺. shield sleeve ⑻. Front liner ⑼. backplate ⑽.impeller ⑾. Back liner ⑿.expeller
⒀. Stuffing box ⒁. bracket ⒂. Bolt

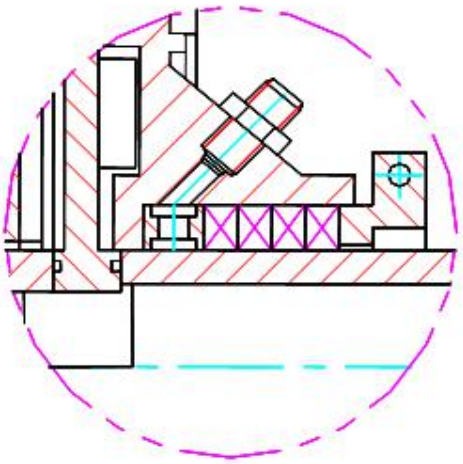

Fig 2

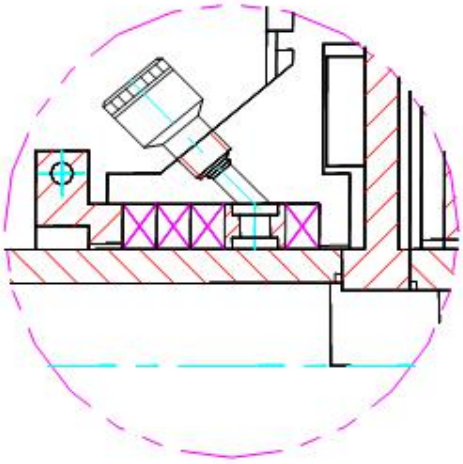

Fig 3

Fig 2 Installation for shaft-sealing with water lubrication

Fig 3 Installation for expeller with grease lubrication

Appendix B: Details for spare parts

No	Code	Name	Qty	Remark
1	UTD-100-1001	Spring of front supporting seat	8	D_2=φ95
2	UTD-200-1002	Attachment Bolt M22×140-12.9	8	With lock nuts and washers
3	UTD-200-1003	Assembly of coarse mesh Screen	2	800x575x45-0.4
4	UTD-200-1004	Assembly of back mesh Screen	2	800x610x45-3
5	UTD-100-1005	Screen press block	4	965mm
6	UTD-100-1006	Screen press block	8	
7	UTD-200-1007	Slurry Inlet nozzle	1	
8	UTD-200-1008	Tank floating ball	1	
9	UTD-200-1009	Elbow pipe of sand wash	2	
10	UTD-200-1010	Cyclone spray head	1	φ60
11	ZJB-200-0001	Centrifugal Impeller	1	
12	ZJB-200-0002	Volute Rear	1	
13	ZJB-200-0003	Packing	2	
14	ZJB-200-0004	Supplementary Centrifugal Impeller	1	
15	ZJB-200-0005	Stuffing Box	1	
16	ZJB-200-0006	Axle Sleeve	1	
17	ZJB-200-0007	Water Sealing Ring	1	
18	ZJB-200-0008	Oil cup	1	

DRILLMASTER

UNIMATE | UNIDRILL | FOUNTECH

Headquarters:
Hunan Drillmaster Engineering Technology Co.,Ltd.
Add: Bldg.3, Phase II, Depu. Wuhe Enterprice Zone, Xingsha, Changsha, China.
Tel: 86-731-84030163
E-mail: info@drillmastergroup.com

www.chinaunimate.com *www.unikelly.com*

www.chinaunimate.com